OIL CIRCUIT DIAGRAMS

Hydra-Matic 4L60-E (1996-98)

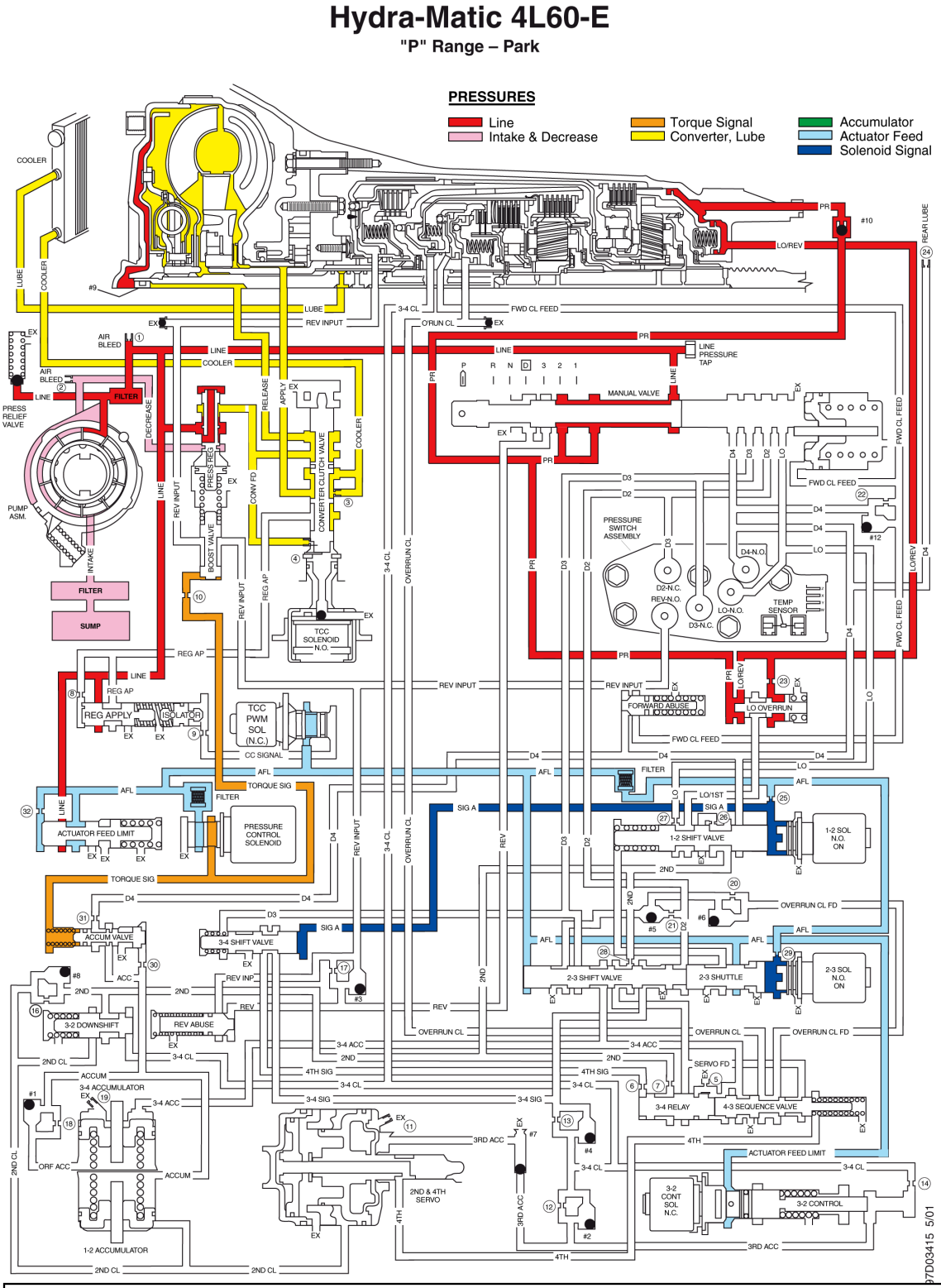

Fig. 1: "P" Range - Park

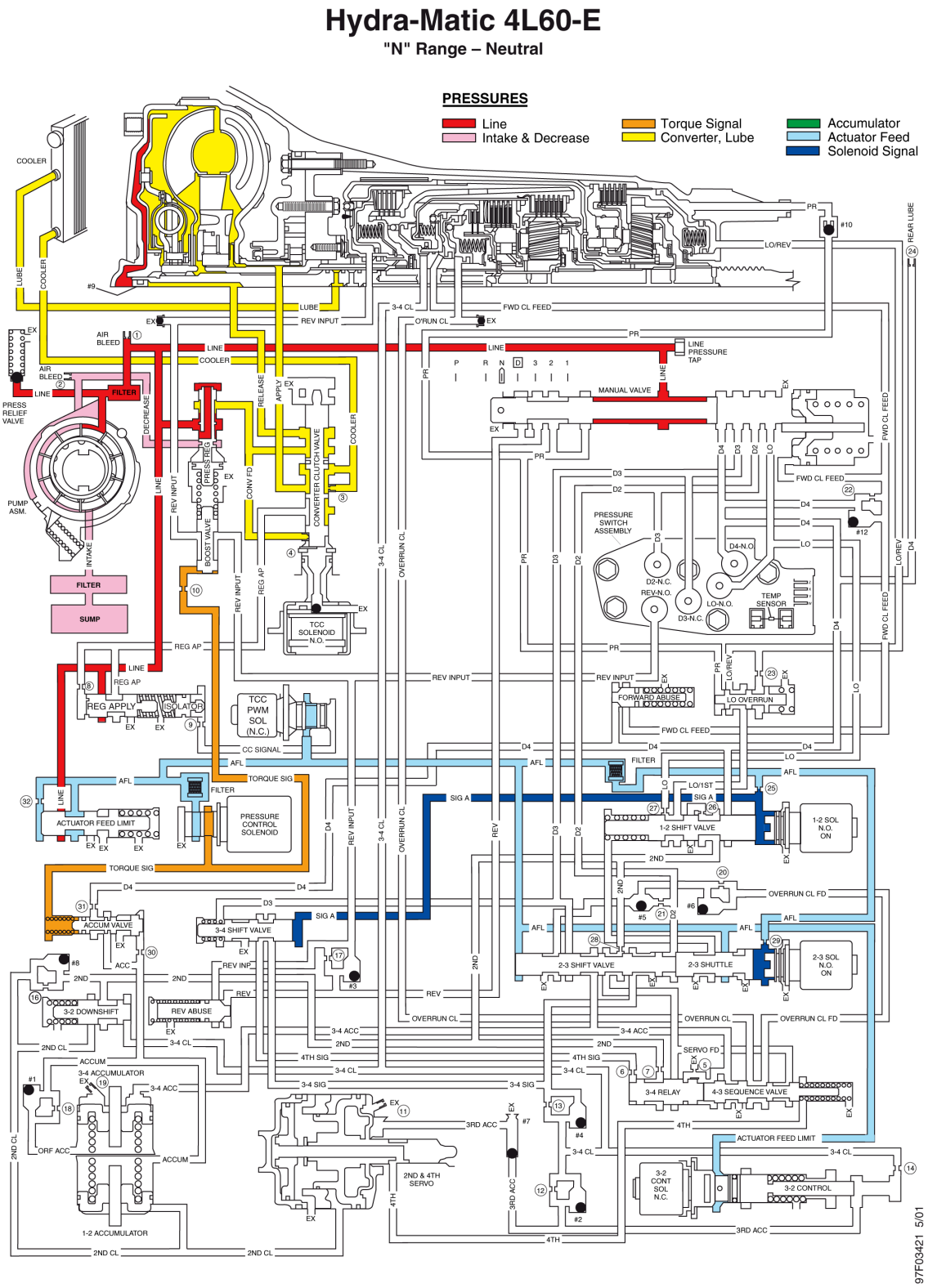

Fig. 2: "N" Range - Neutral

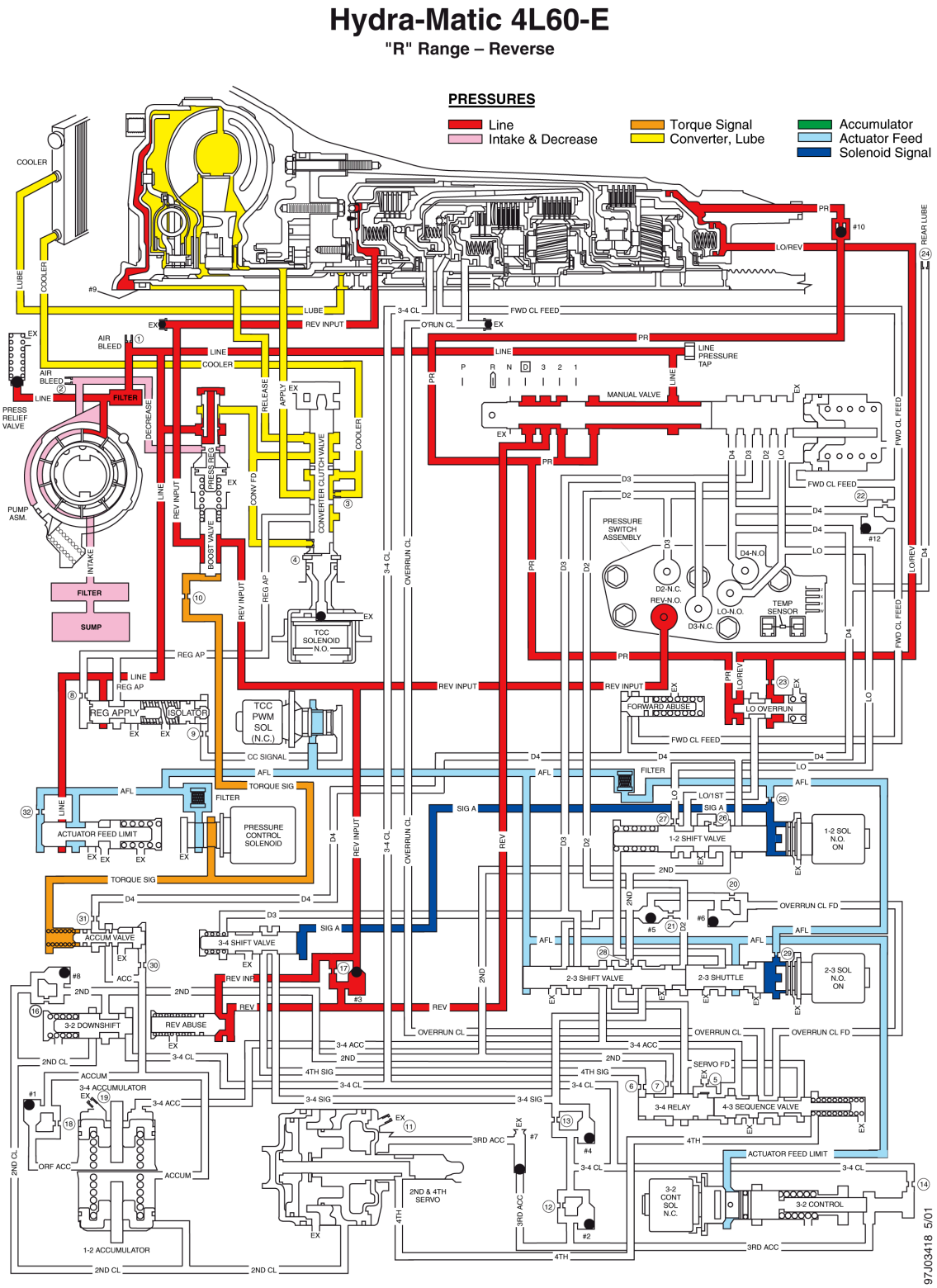

Fig. 3: "R" Range - Reverse

Hydra-Matic 4L60-E

"OD" Range – 1st Gear

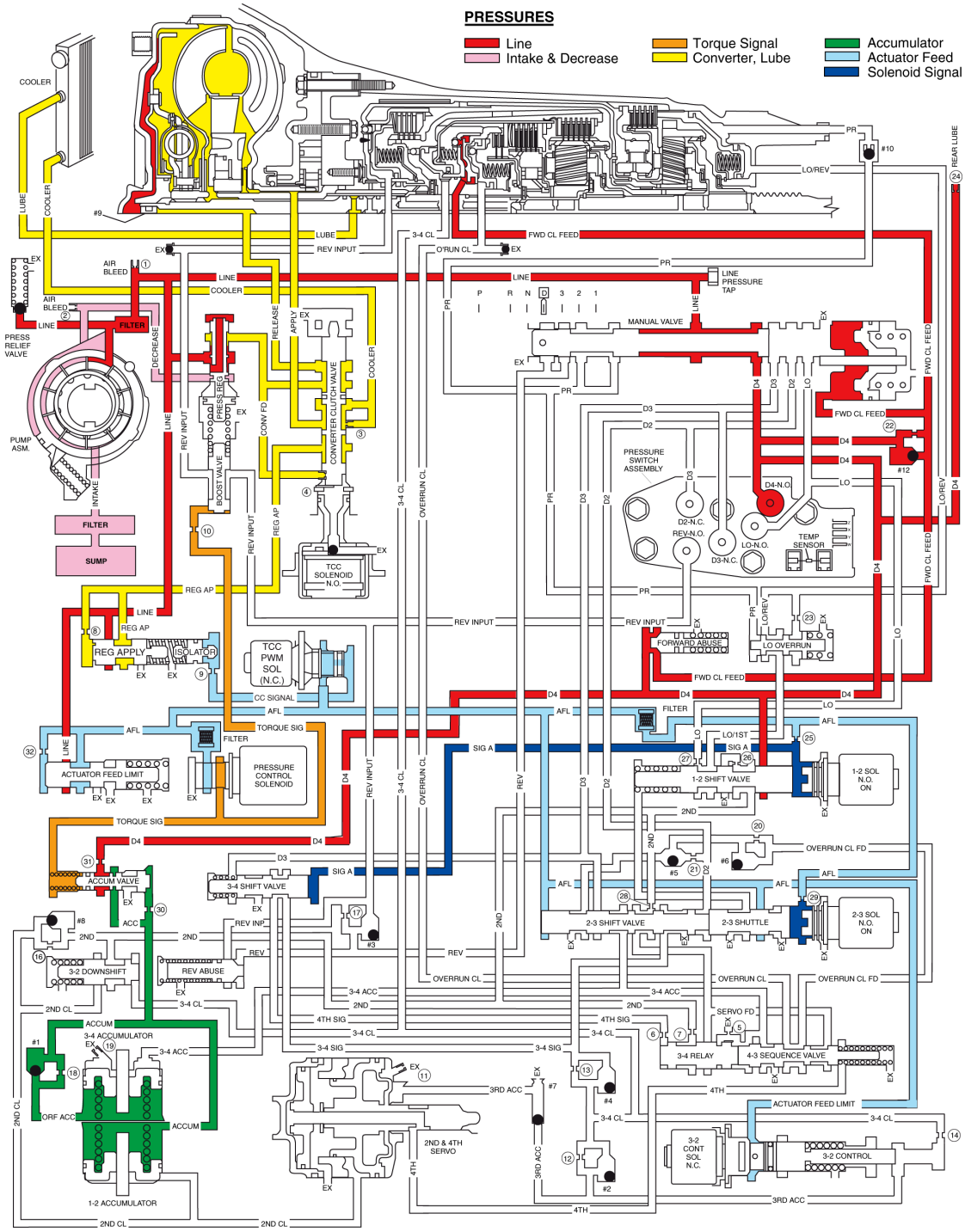

97J03423 4/99

Fig. 4: "OD" Range - 1st Gear

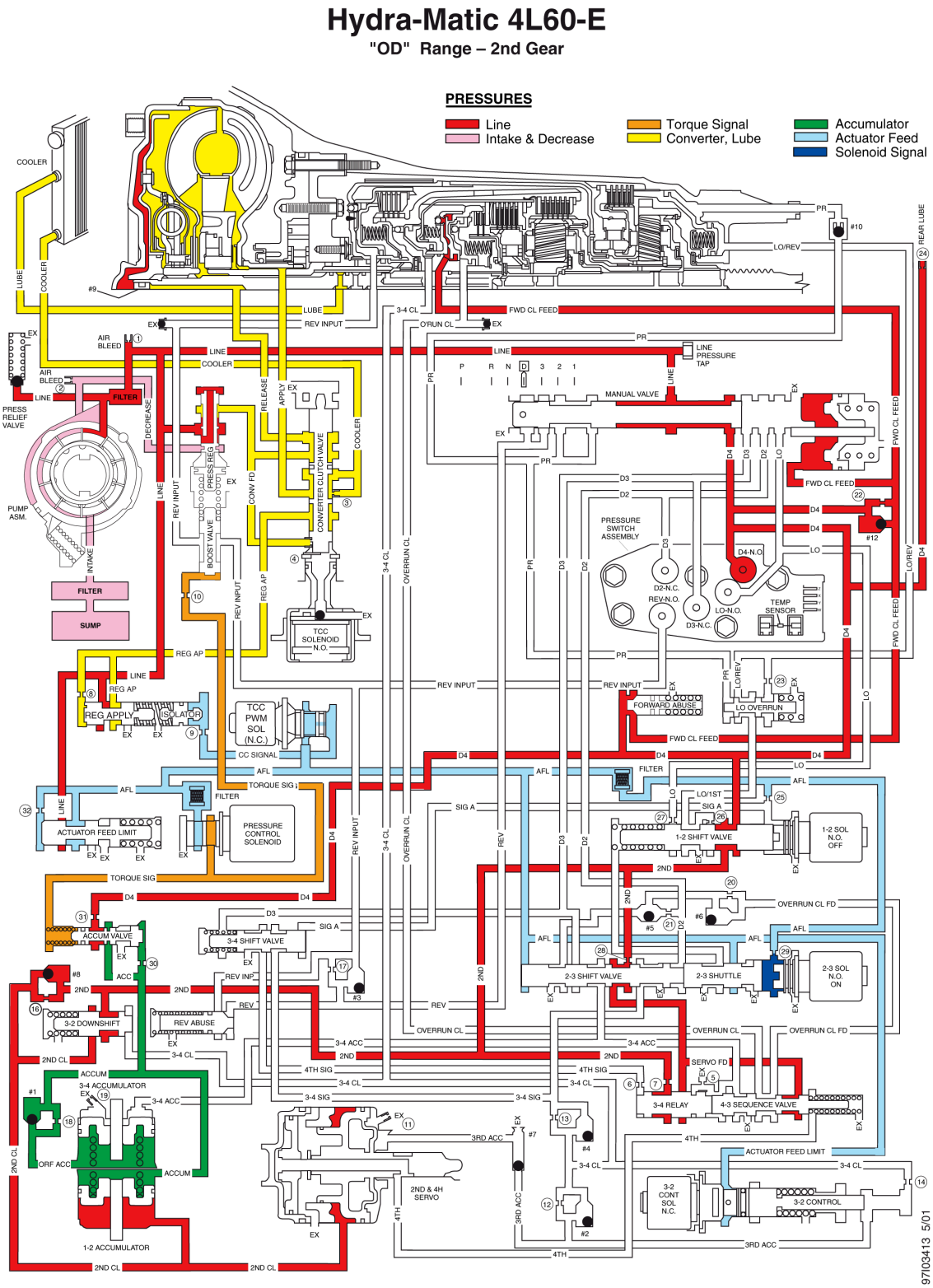

Fig. 5: "OD" Range - 2nd Gear

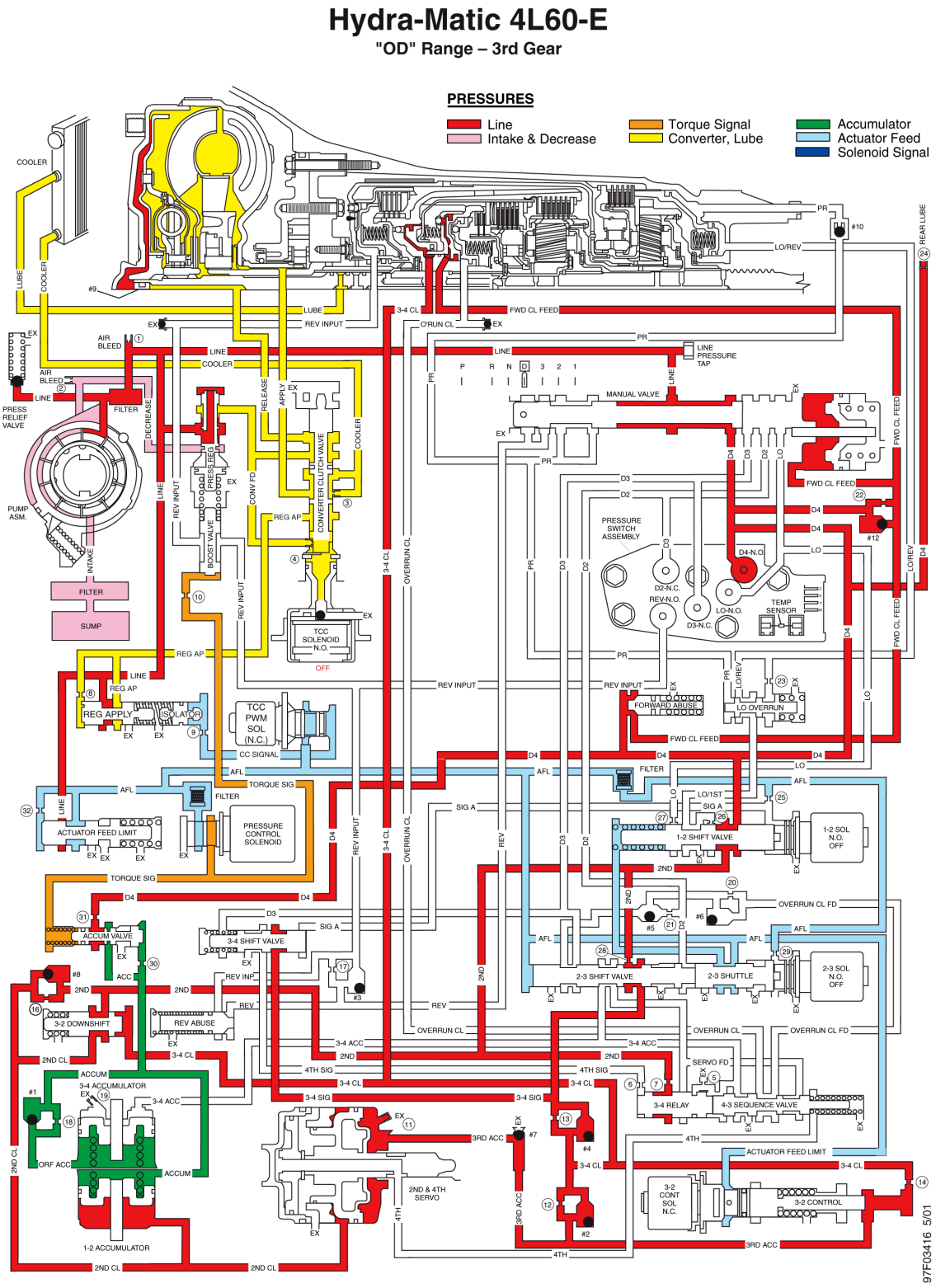

Fig. 6: "OD" Range - 3rd Gear

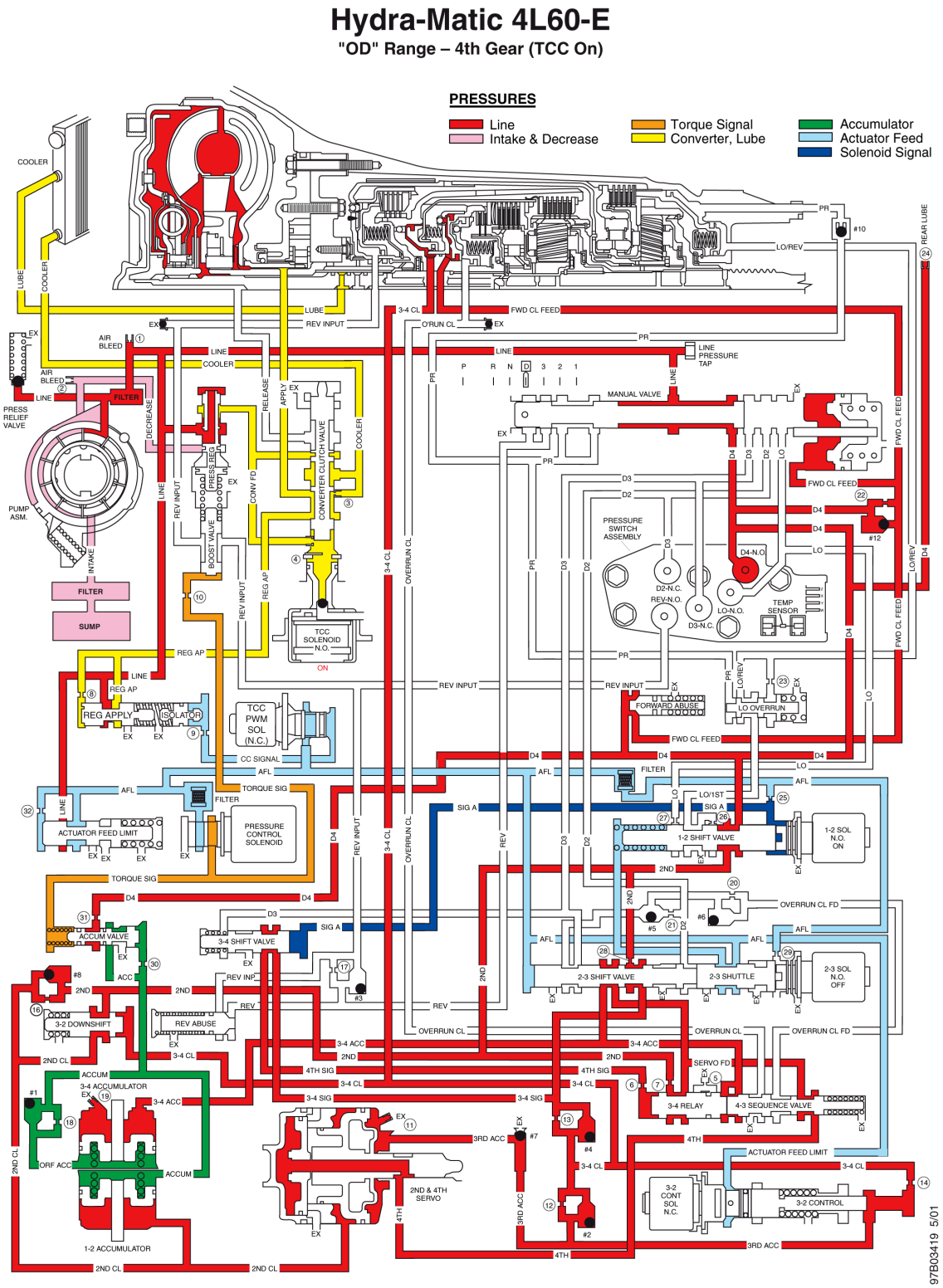

Fig. 7: "OD" Range - 4th Gear (TCC Applied)

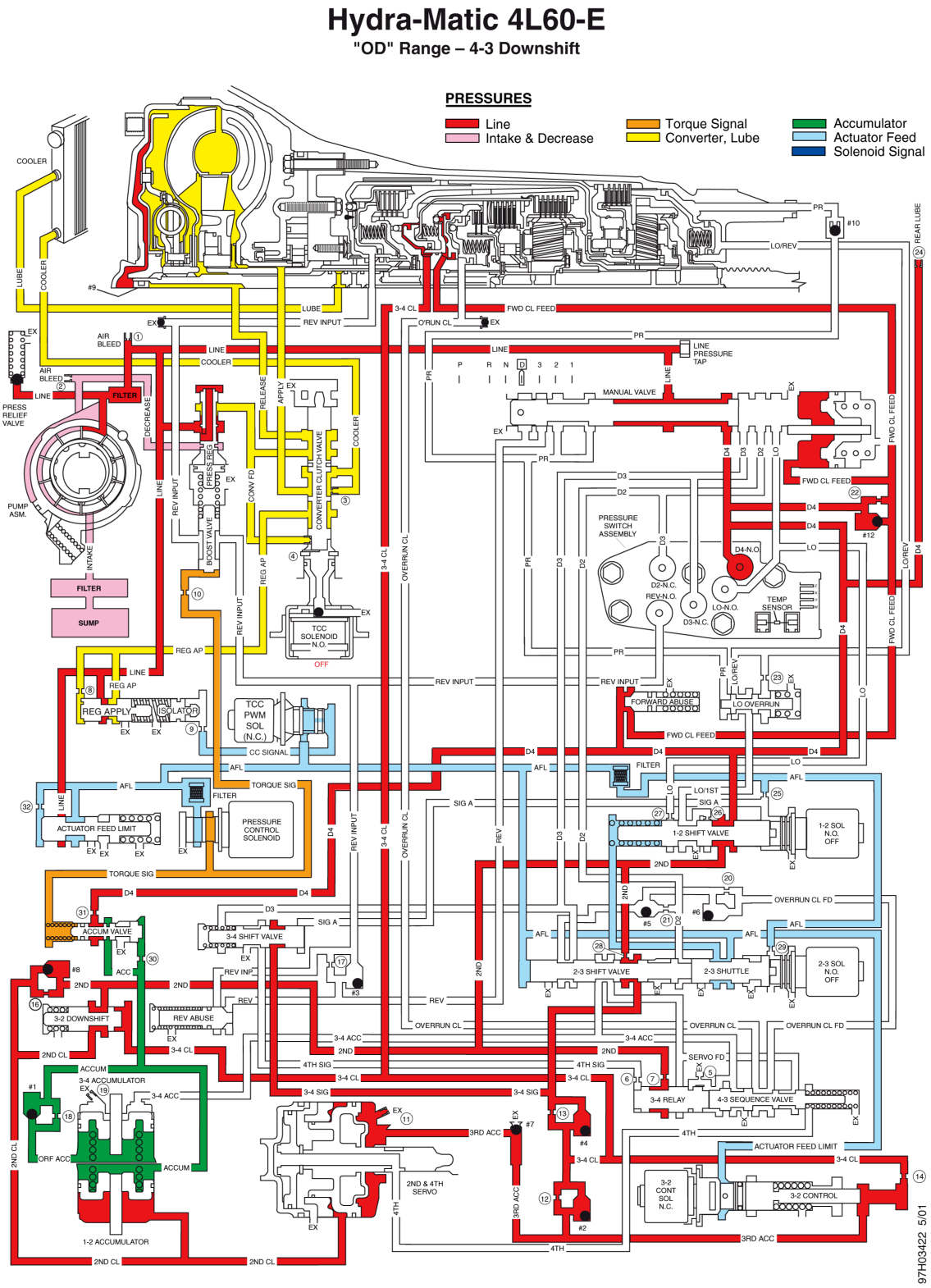

Fig. 8: "OD" Range - 4-3 Downshift

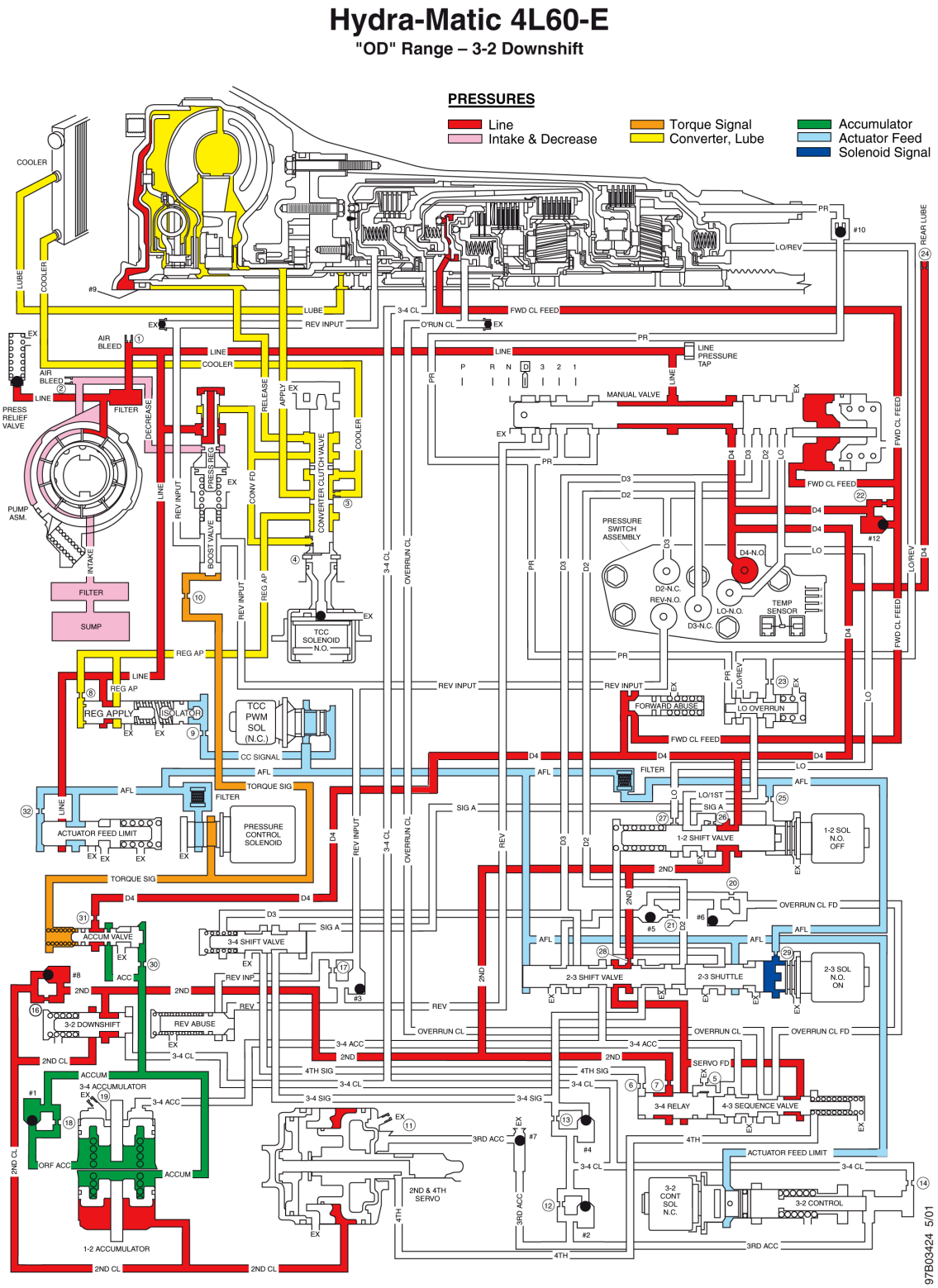

Fig. 9: "OD" Range - 3-2 Downshift

Hydra-Matic 4L60-E

"3" Range – 3rd Gear (Manual Select)

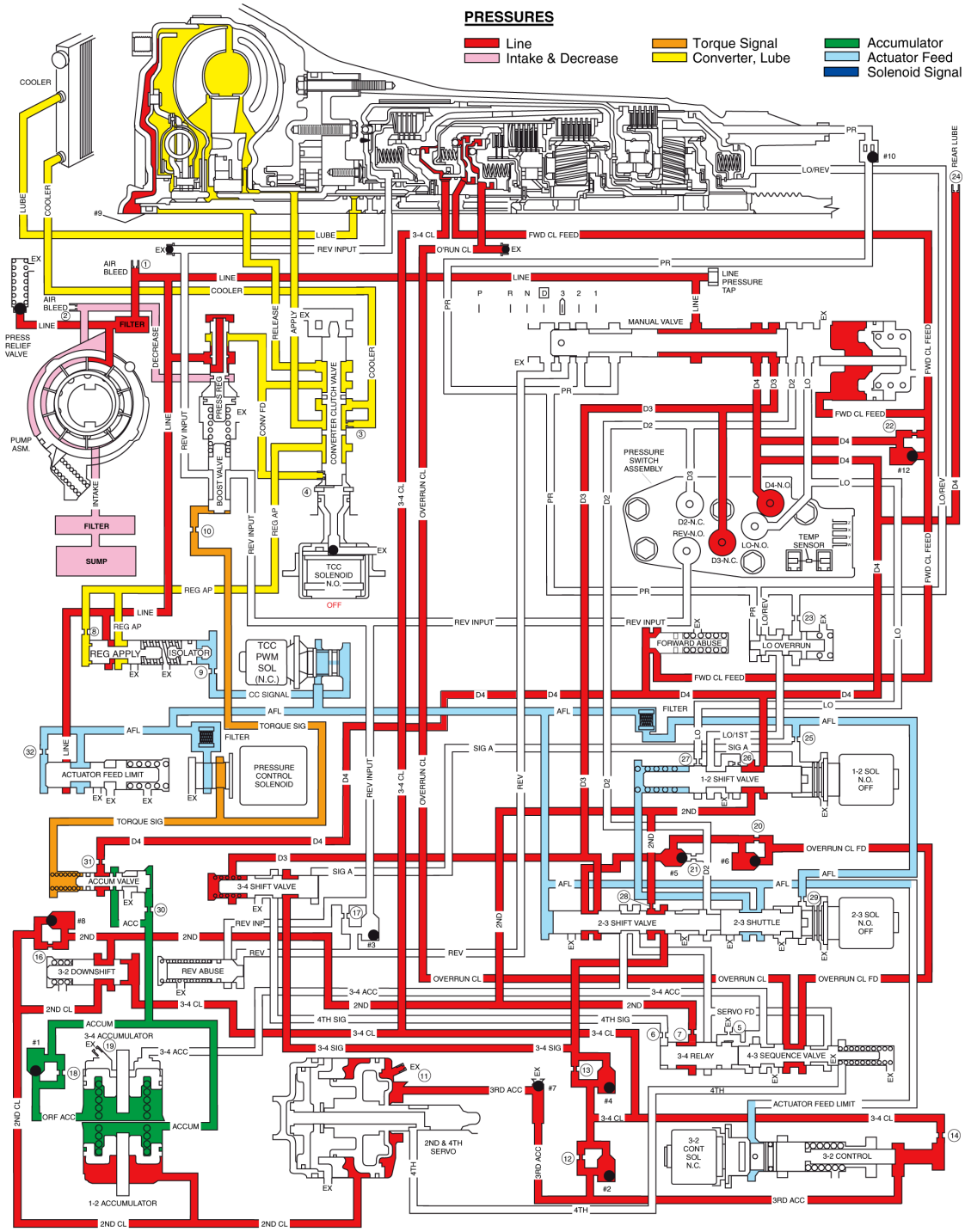

97A03414 4/99

Fig. 10: "3" Range - 3rd Gear (Manual Select)

Hydra-Matic 4L60-E

"2" Range – 2nd Gear (Manual Select)

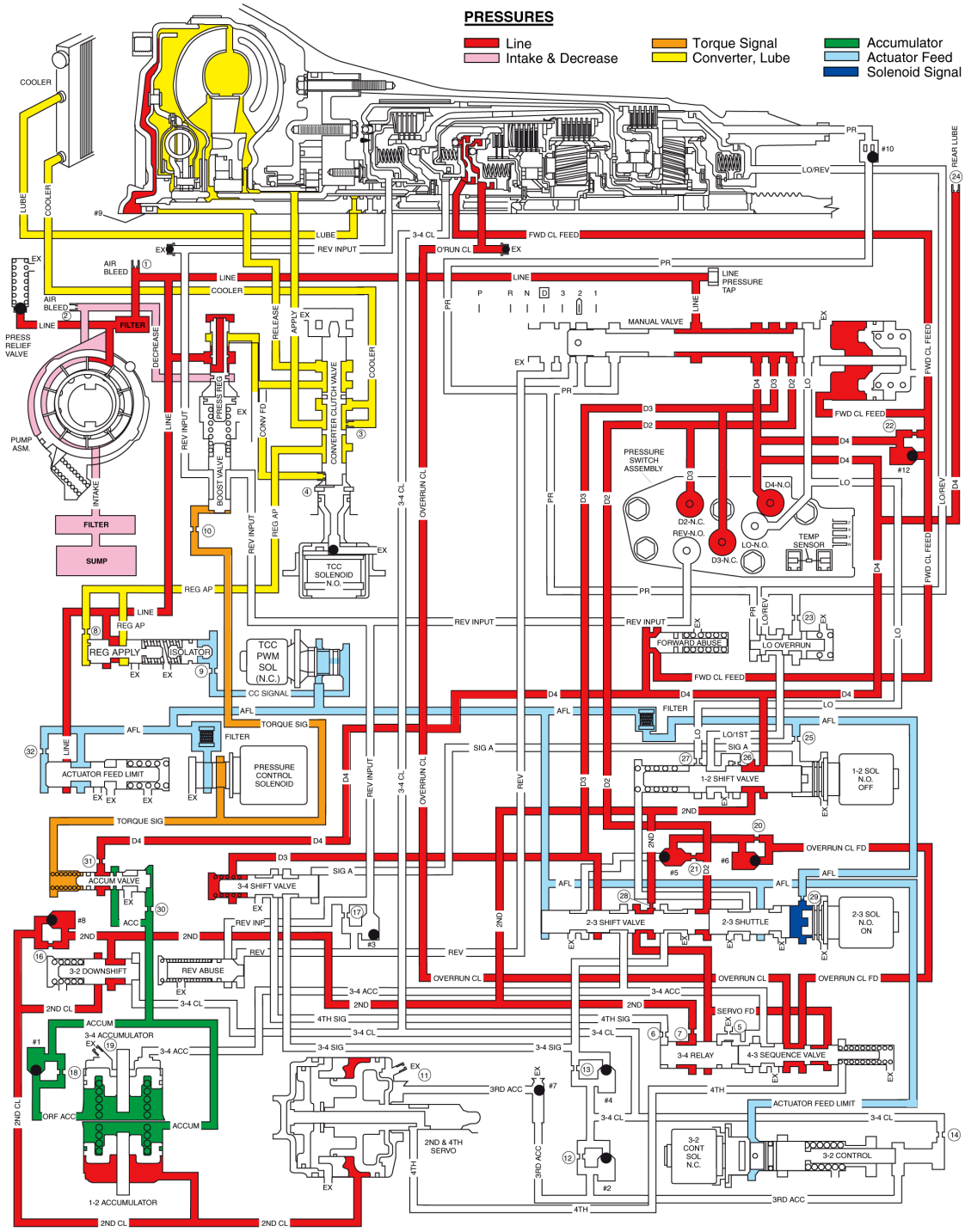

Fig. 11: "2" Range - 2nd Gear (Manual Select)

Hydra-Matic 4L60-E

"1" Range – 1st Gear (Manual Select)

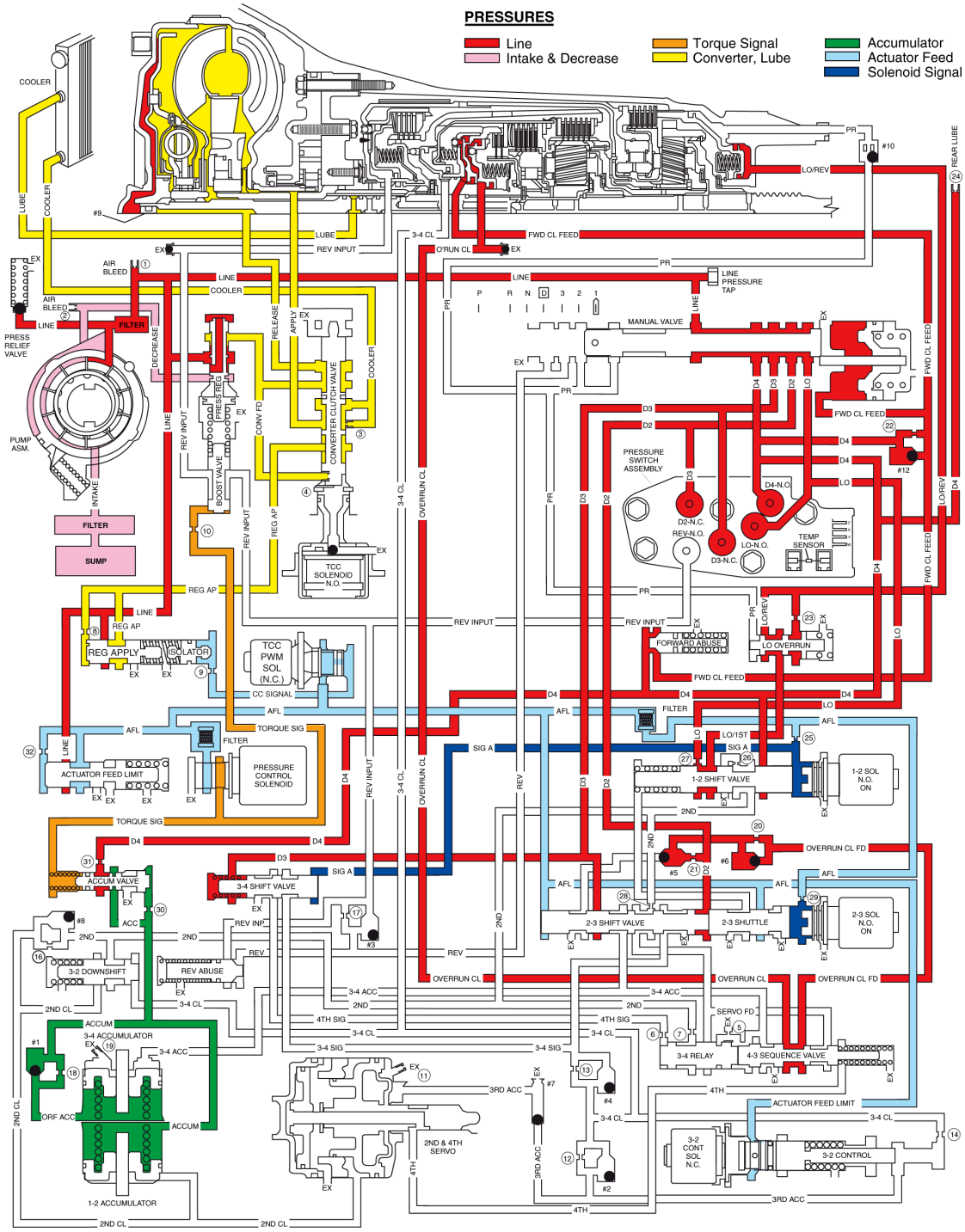

97D03420 4/99

Fig. 12: "1" Range - 1st Gear (Manual Select)